ANSON (2006)

CLINICAL BASIN

{tab=Descriptions} **Wall hung wash-basin**

Without tap hole, chain hole and overflow
610mm (L) x 480mm (W) x 213mm (H)

☐
White

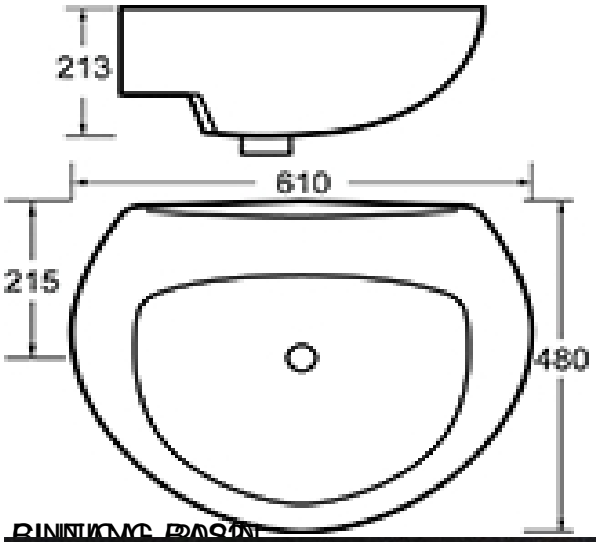

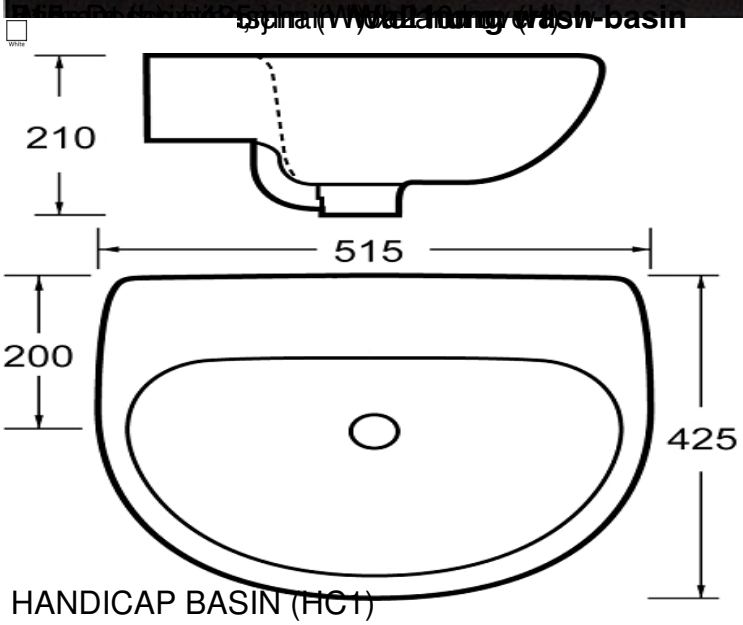

HANDICAP BASIN (HC1)
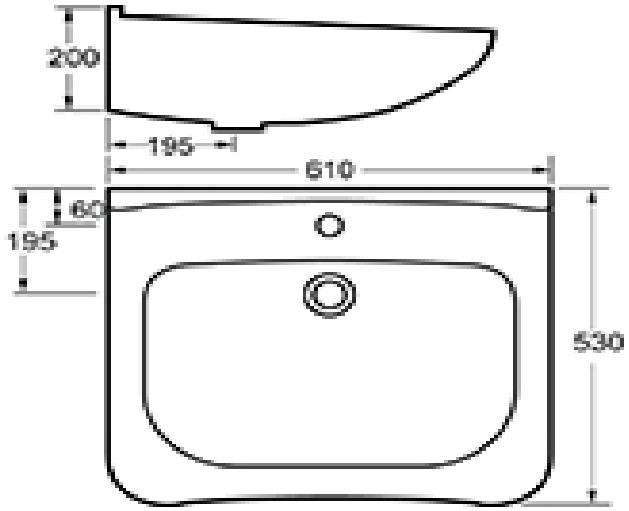
Wall-hung wash-basin